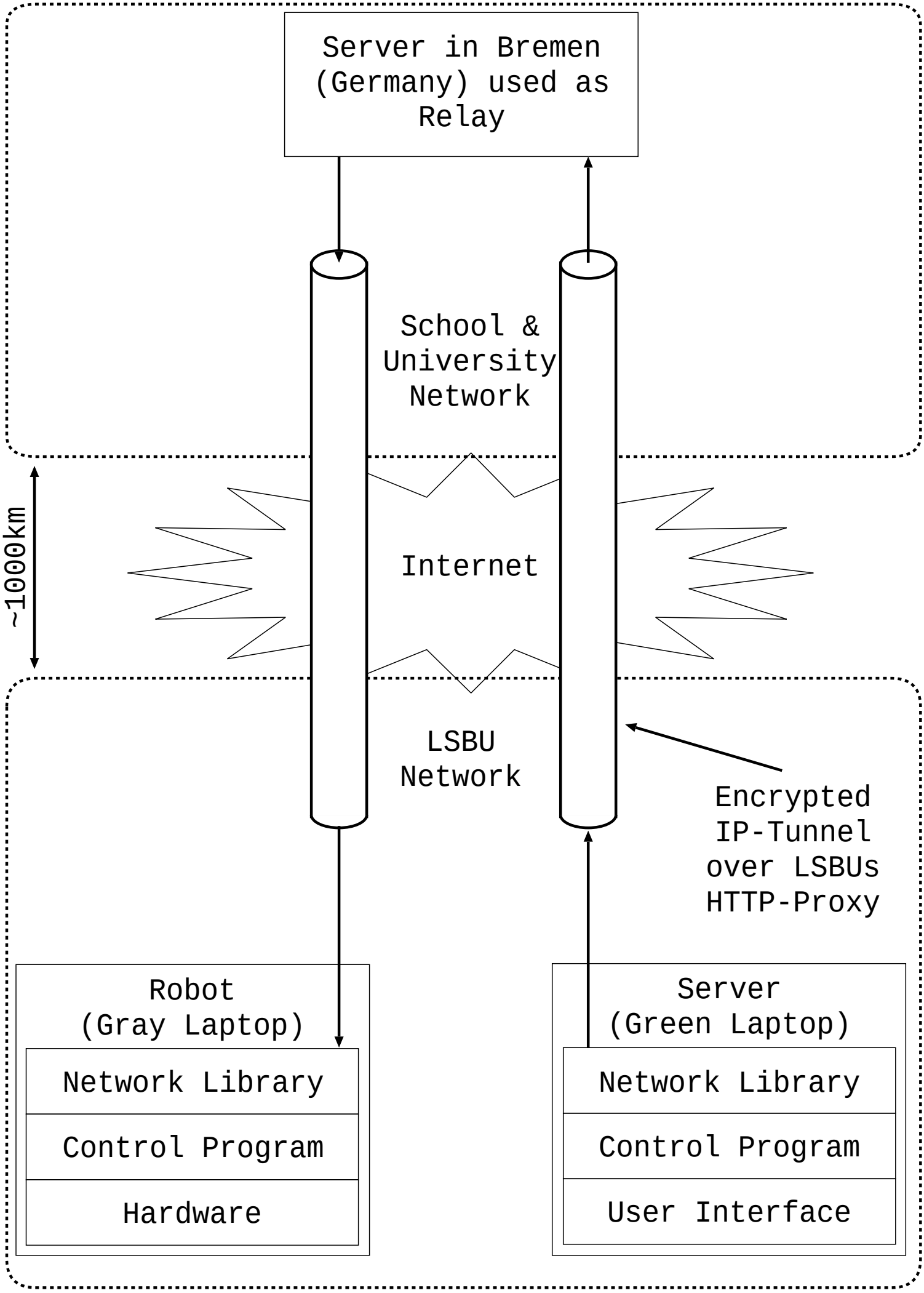
Server in Bremen (Germany) used as Relay
School & University Network
~1000km
Internet
LSBU Network
Encrypted IP-Tunnel over LSBUs HTTP-Proxy
Robot (Gray Laptop)
Network Library
Control Program
Hardware
Server (Green Laptop)
Network Library
Control Program
User Interface